JANUS 3/30
CIRCULATOR WATER HEATER
INSTALLATION, COMMISSIONING & SERVICING INSTRUCTIONS
G.C. No 53 416 03

Publication No.ZZ 166/7
May 2000

WARNING: THIS APPLIANCE MUST BE EARTHED

This appliance is for use with natural gas only.

1. GENERAL DESCRIPTION

1.1 JANUS 3/30 is an open flued gas fired circulator designed for floor or wall mounting, which can generate up to 64.8 litres of hot water per hour (14.3 gal/h). It is suitable for use in a gravity fed circuit serving a hot water storage cylinder (tank) and may be used efficiently with indirect storage systems or, in soft water areas, direct systems. Indirect systems are preferred; direct systems should be used only when recommended by the local water company.

1.2 The gas supply to the main burner is controlled by a Multifunctional gas control. The main burner operates in conjunction with a permanent pilot burner and a thermoelectric sensing device. Pilot ignition is by means of a Piezo unit.

2. TECHNICAL DATA

2.1 **NATURAL GAS:**

Injector: Amal type 187/001/004. Diameter 1.7mm.

Setting pressure:	14.0 mbar (5.6 in wg).
Gas rate:	0.42m^3/h (14.85ft^3/h).
Input:	4.4kW (15,000Btu/h).
Output:	3.32kW (11,340Btu/h).
Gas connection:	Rc$^1/_4$ ($^1/_4$in BSP).
Gas service cock:	Rc$^1/_4$ ($^1/_4$in BSP) union gas cock (supplied loose).

Table 1.
JANUS 3/30 Gas configuration

2.2 **WATER:**

Maximum output: Up to 64.8 litres/h (14.3 gal/h) with 44.5°C (80°F) rise.
Maximum water temperature: Normal factory setting 60°C (140°F) see Section 10.2.2.
User temperature control allows settings below maximum.
Maximum working head: 20m (65ft).
Minimum circulation head: 610mm (24in) with indirect cylinder, 356mm (14in) with direct cylinder.

2.3 **FLUE:**

75mm (3in) as standard, with adapter plate to convert to 100mm (4in) flue.

2.4 **OVERALL DIMENSIONS**

Height: 496mm (19.5in).
Width: 123mm (4.9in).
Length: 416mm (16.9in) including controls cover.
353mm (13.9in) excluding controls cover.

2.5 **INSTALLATION AND SERVICING CLEARANCES:**

IMPORTANT: Care must be taken to ensure that adequate space is available at the front and 'open' side of the heater for installation purposes.

2.5.1 Minimum clearance for combustion:
Front: 25mm (1in) from controls cover.
Sides: 16mm ($^5/_8$in) from side nearest to wall, 13mm ($^1/_2$in) from open side to any cylindrical obstruction (i.e., Hot water cylinder). **Note:** If these minimum side clearances are to be adopted, special care must be taken in the compartment construction to permit access to appliance mountings.
Rear: 100mm (4in).
Base: Nil. The appliance may be floor mounted on noncombustible material.

2.5.2 Minimum clearance for servicing:
Front: 300mm (12in).
Side: 200mm (8in).

Note: Flow and return pipes may be routed over the top of the heater, provided adequate access is available for heat exchanger cleaning.

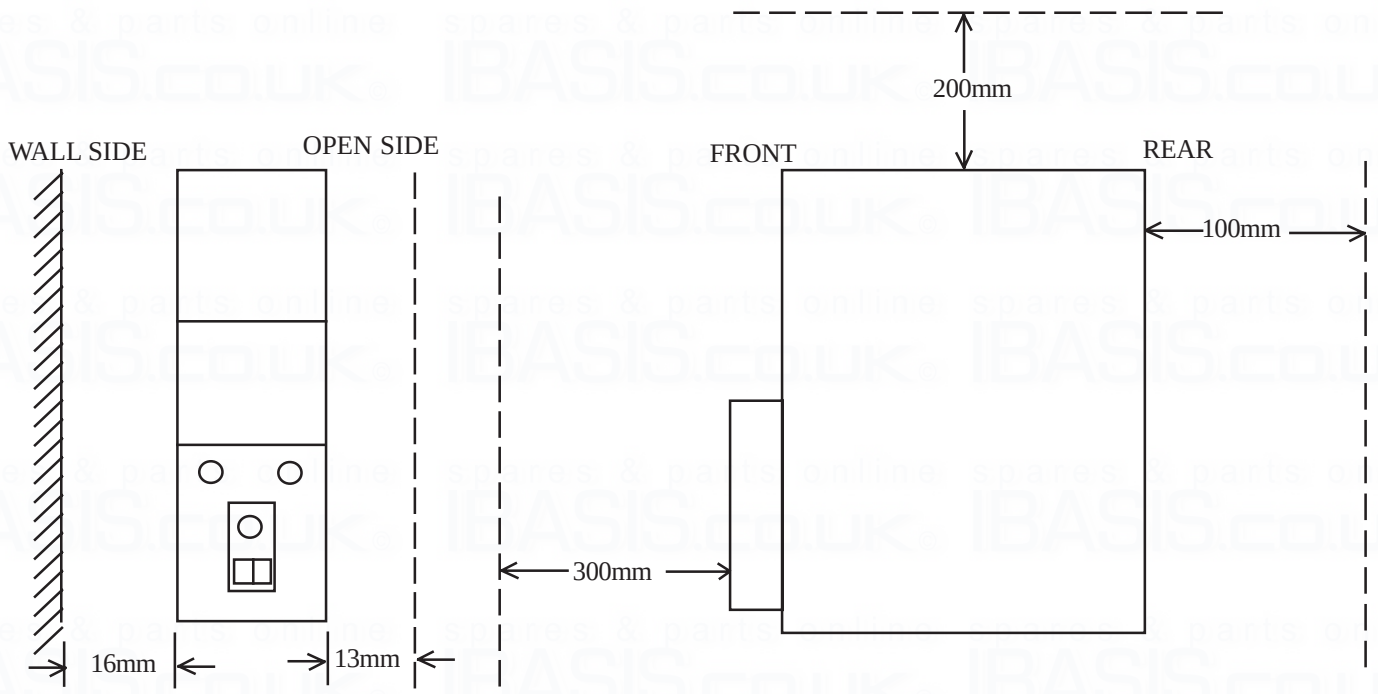

Fig. 1
Minimum clearances for JANUS 3/30

3. GENERAL REQUIREMENTS

3.1 **RELATED DOCUMENTS: (refer to current issues).**
This appliance MUST BE installed in accordance with the relevant requirements of the Gas Safety (Installation and Use) Regulations, local Building Regulations, and the Bye-laws of the local Water Company. It should also be in accordance with any relevant requirements of the local Gas Region and Local Authority, and the relevant recommendations of the following British Standard Codes of Practice:

BS 6798: Specification for installation of gas fired hot water boilers of rated input not exceeding 60kW.
BS5546: Installation of gas hot water supplies for domestic purposes (2nd family gasses).
BS5440 Pt. 1: Flues.
BS5440 Pt. 2 Air supply.
BS6891: Installation of low pressure gas pipe work up to 28mm (R1) in domestic premises.
BS6700: Design, Installation, testing and maintenance of services supplying water for domestic use within buildings and their curtilages.

3.2 **LOCATION:**

3.2.1 The location chosen for the circulator must permit the provision of a satisfactory flue and termination, an adequate air supply for combustion purposes, and an adequate space for servicing and air circulation around the appliance. **The JANUS 3/30 must not be installed in a room containing a bath or shower, or either a bedroom or a bed-sitting room.**

3.2.2 A compartment used to enclose the circulator must be designed and constructed specifically for this purpose. An existing cupboard or compartment may be used providing that it is modified for this purpose. Details of essential features of cupboard installations are given in BS6798 and BS5546.

3.3 CUPBOARD AND COMPARTMENT VENTILATION:

3.3.1 Where JANUS 3/30 is to be installed in a cupboard or compartment, permanent air vents are required in the enclosure at both high and low level for combustion, flue dilution, and cooling purposes. These air vents must communicate either with a room or internal space, or be direct to outside air.

3.3.2 Minimum effective areas of the permanent air vents required in the enclosure are specified below (ref. BS5440 Pt. 2, Table 2)

Note: Both air vents must communicate with the same room or internal space, or be on the same wall to outside air.

Position of Air vents	Air from room or internal space	Air direct from outside
High Level	40cm² (6½ in)	20cm² (3¼ in²)
Low Level	80cm² (13in²)	40cm² (6½ in²)

Table 2
Permanent Air Vents, Minimum Effective Areas

3.3.3 There are no specific ventilation requirements if the appliance is installed in a room or space, but it should be noted that if there is a fan in the room or internal space (i.e. extractor fan or cooker hood fan), spillage of combustion products may occur if the room or internal space is not adequately ventilated to outside air. Where such installations occur, a spillage test as described in sub-para 3.5.8 must be carried out, and rectification undertaken where necessary.

3.4 GAS SUPPLY:

Installation of pipework is to be in accordance with BS6891. Pipework from the gas meter is to be of adequate size, and pipes of a smaller diameter than the appliance are not to be used. The complete installation must be tested for gas soundness, and purged as detailed in BS6891.

3.5 FLUE SYSTEM:

Detailed recommendations for Flues are given in BS5440 Pt 1. The following points however, are of particular importance:

3.5.1 The cross-sectional area of the flue serving the appliance must not be less then the area of the flue outlet of the appliance.

3.5.2 A terminal of a type which has been tested and found satisfactory by British Gas should be fitted at the outlet.

3.5.3 The point of termination must not be within 600mm (2ft) of a opening window, air vent, or any other opening and should be above roof edge level.

3.5.4 The flue should have a length not exceeding that given in BS5440 Pt 1, Fig. 13 to avoid condensation.

3.5.5 The flue pipe must not be closer than 25mm (1in) to combustible material. For twin wall flue pipe, the 25mm (1in) distance should be measured from the inner pipe face.

3.5.6 The flue pipe must be secured by support brackets, fitted throughout its length, at intervals of not more than 1.8m (6ft).

3.5.7 If flueing into an existing chimney, the chimney must be swept before connecting the appliance.

3.5.8 The flue system must be tested prior to installation of the appliance by application of a lighted smoke match to the opening and observing whether all the smoke is pulled up the flue. In certain conditions, there may be spillage of smoke due to inversion caused by the flue being colder than the outside air. If such occurrences arise, heat is to introduced into the flue (i.e. by blowlamp) and the spillage test repeated. If either downdraught or no definite upflow is indicated, this must be investigated and corrected.

3.6 WATER CIRCULATION SYSTEM:

Detailed recommendations for the water circulation system are given in BS6798 and BS5446.

3.6.1 To ensure good circulation in gravity circuits, flow pipes should be designed to run vertically from the water heater before running laterally. Any lateral run should be less than 2 x the previous vertical run. Pipework should be installed with a rise towards the vent point. **Note:** For easy removal of the water heater, compression fittings are recommended.

3.6.2 Drain cocks must be located in accessible positions, which permit the draining of the whole system, including the appliance and hot water storage vessel. A drain cock should be fitted at the lowest point of the water heating circuit and, in the case of an indirect system, another must be fitted at the lowest point of the cold feed. Drain cocks should be at least $^1/_2$ in nominal size, and be in accordance with BS28798.

3.6.3 Economy valves can only be used in a DIRECT installation.

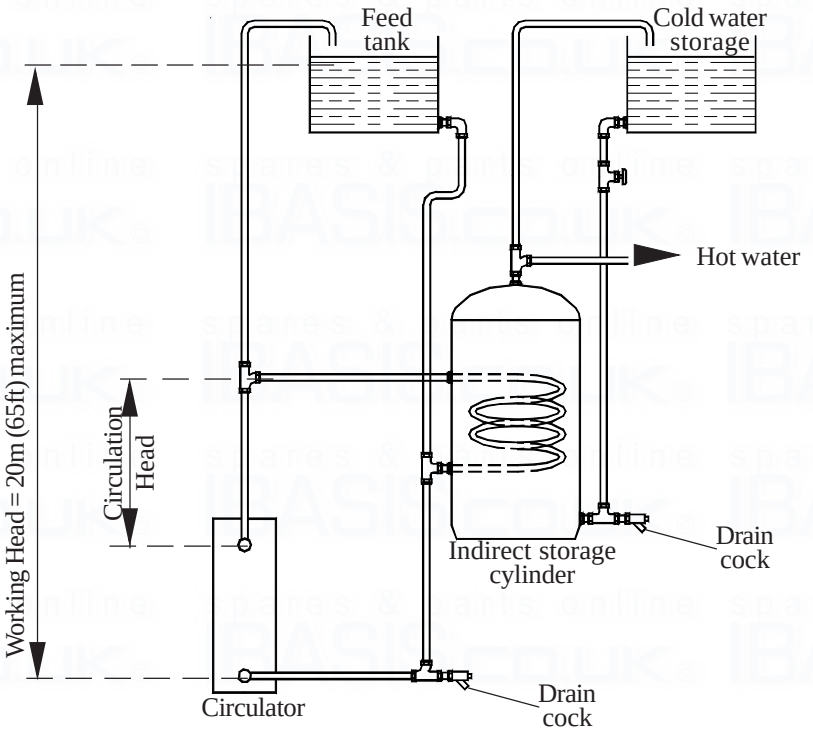

Fig. 2a.
Typical JANUS 3/30 Indirect System application.

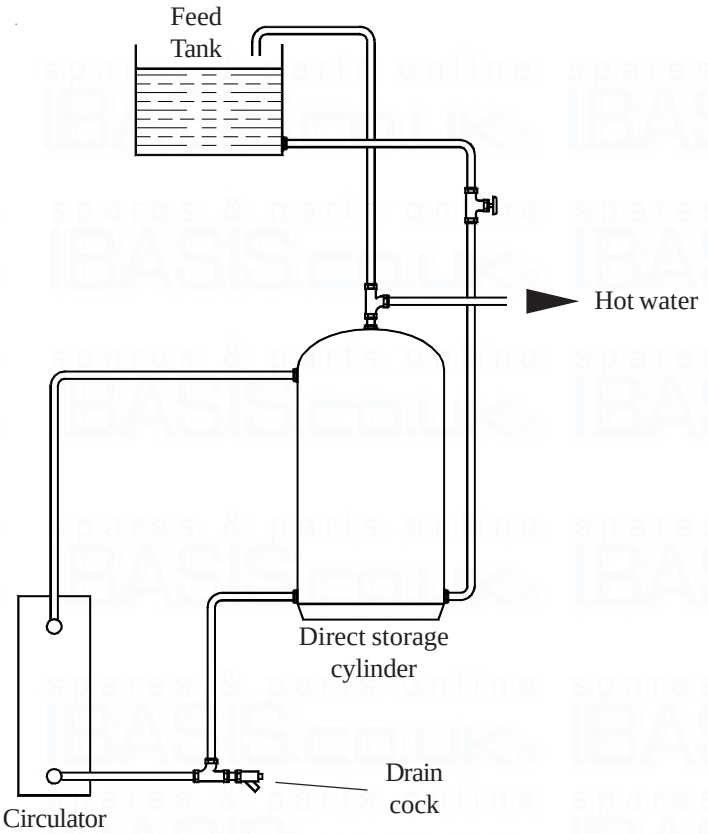

Fig. 2b
Typical JANUS 3/30 Direct System application.

4. INSTALLATION

4.1 PREPARATION:

Referring to Figs. 3a to 3c for component identification, Para 2.5 and Fig. 1 for minimum installation clearances

4.1.1 Remove the appliance from the packaging, and retain loose components,

4.1.2 Remove and discard the transit strap.

4.1.3 Remove the Burner and Controls Assembly as follows:

a. Disconnect the igniter lead from Piezo unit.

b. Release 4 x securing screws and remove the lower front panel

c. Remove the thermostat retaining plug from the flow connection pocket (item 5) and remove the thermostat phial taking care to avoid causing damage to the thermostat phial.

d. Release the burner mounting screw and remove the Burner and Controls Assembly, taking care to avoid causing damage to the Thermostat capillary.

f. Refitting of the Burner and Controls Assembly following installation of the appliance is in reverse order, remembering to reconnect the igniter earth lead at the lower front plate screw.

4.2 FLOOR MOUNTING:

4.1 Position the appliance on the floor, and mark the position for the floor fixing screws through the front feet.

4.2 Drill and plug the fixing points (as necessary), and secure the appliance with suitable screws (not provided).

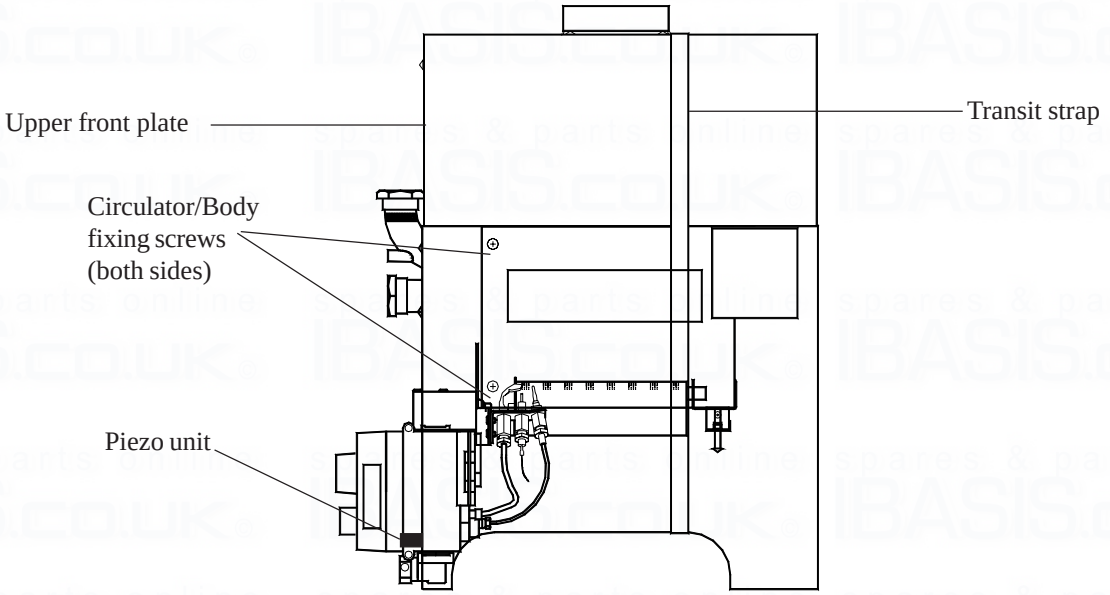

Fig. 3a
JANUS 3/30 General Arrangement

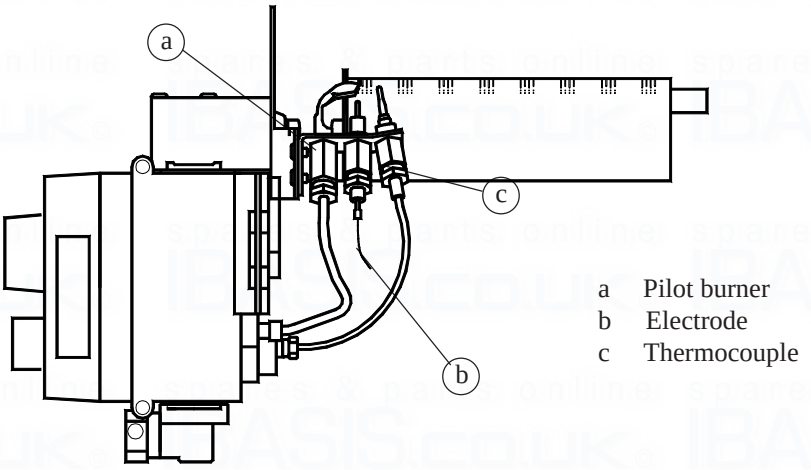

Fig. 3b
BURNER and CONTROLS ASSY

4.3 **WALL MOUNTING:**

Prior to wall mounting, remove the fixing template from the packaging and decide whether the appliance is to be L.H or R.H mounted. The handing of the mounting refers to the side of the heater to be affixed to the wall, utilizing the mounting bracket provided.

4.3.1 Replace the 2 x 13mm No 8 case/body fixing screws from the side of the heater to be affixed to the wall with 2 x 20mm No 8 screws (provided separately), ensuring that these screws are not fully tightened.

4.3.2 Fit and secure the mounting bracket to heater using the screws fitted at 4.3.1, ensuring that the free slots on the mounting bracket are to the front of the heater.

4.3.3 Using the appropriate template, mark the position of the 4 x fixing screws on the wall where the heater is to be fitted, ensuring that the heater will be level when fitted.

4.3.4 Fix the retaining bracket to the wall using suitable wall plugs and screws.

4.3.5 Plug and partially insert 2 x screws to accept the mounting bracket.

4.3.6 Locate the appliance rear foot in the retaining bracket and engage the 2 x slots in the mounting bracket onto the screws fitted at 4.3.5.

4.3.7 Ensuring that the appliance is level, secure the mounting bracket fixing screws.

4.4 **FLUE INSTALLATION:**

The flue pipe is to be installed in accordance with the guidelines detailed in para 3.5.

4.4.1 Ensure that a minimum length of 600mm (24in) of vertical flue is fitted directly above the draught diverter wherever possible.

4.4.2 Ensure that a split collar is fitted in the flue within the 600mm (24in) vertical flue, preferably at or above the mid point, to enable draught diverter removal.
Note: If a flue pipe conforming to BS715 is used, a suitable flue adaptor (not included) must be fitted.

4.5 **WATER CONNECTIONS:**

4.5.1 Connect flow and return pipes as required, in accordance with the guidelines detailed in Sect 3.6. To facilitate subsequent dismantling of the heat exchanger, use union fittings at the point of connection to the appliance. Ensure that return pipe work does not restrict access to the thermostat phial.

4.5.2 Prior to installation of the pump (if required), flush the system thoroughly ensuring that all valves are open.

4.6 **BURNER AND CONTROL ASSEMBLY FITTING:**

4.6.1 Fit the Burner and Control assembly to appliance, ensuring that the square lug to the rear of the assembly engages into the locating bracket, and secure using the mounting screw ensuring that the screw is also used to secure the capillary clip.

4.6.2 Insert thermostat phial fully into flow pocket and secure using thermostat retaining plug.

4.7 **GAS CONNECTIONS:**

4.7.1 Connect a suitable gas supply to the appliance via the union service cock supplied. Ensure that the pipe work does not cause obstruction for Burner and Control assembly removal.

4.7.2 Test the gas installation for gas soundness, and purge in accordance with BS6891.

4.8 **FINAL ASSEMBLY:**

4.8.1 Connect the ignition lead to the Piezo unit.

4.8.2 Fix the lighting instruction label to the exposed side of the appliance.

5. COMMISSIONING

5.1 With the pump fitted (if required), fill the water circulation system, clear any air locks and check for water soundness.

5.2 Remove the Multifunctional Control Temperature/Control knob, (this is a push fit only)

5.3 Ensure that the Multifunctional Control pilot adjusting screw is fully out, (approximately 5 full turns counterclockwise from fully in) indicated by a slight restriction when turned counterclockwise.

5.4 **WATER TEMPERATURE SETTING FOR INDIRECT SYSTEMS:**

Note: Thermostats are factory set to a temperature of 60°C (140°F), which is suitable for DIRECT and should NOT be exceeded for this type of system. For INDIRECT systems, removal of stop screws situated on the temperature control mechanism allows the Temperature Control to be set beyond the 60°C limit.

5.4.1 Referring to Figs. 4, identify stop screws 1 and 2.

5.4.2 Dependant upon the required water temperature, remove:

a. Stop screw 1 to provide a maximum temperature of 68°C (155°F), or,

b. Stop screws 1 and 2 to provide a maximum temperature of 77°C (170°F).

5.4.3 Refit the Multifunctional Control Temperature/Control knob, ensuring that it fully engages on the valve spindle.

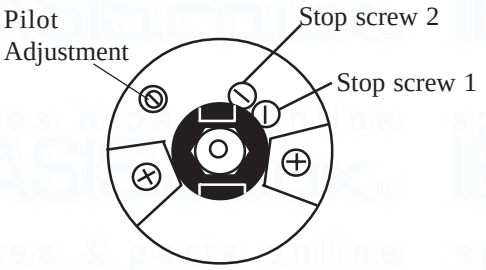

Fig. 4a
Stop screw positions

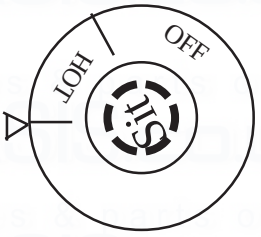

Fig. 4b
Minimum Setting 60ºC

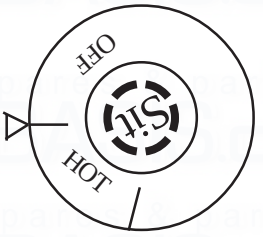

Fig. 4c
Maximum Setting 77ºC

Fig. 4
Water Temperature Control Settings

5.5 **GAS PRESSURE SETTING:**

5.5.1 Referring to fig. 5, remove the Outlet Pressure Test Point cover and connect a Gas Pressure Test Gauge.

5.5.2 Turn the gas supply on at the gas service cock.

5.5.3 Referring to the lighting instruction label, ignite the Pilot Burner and ensure that the pilot flame envelopes the thermocouple tip, adjusting the Pilot Adjusting screw if necessary.
Note: If the pilot flame cannot be set using the Pilot Adjustment screw, the Pilot Burner Assembly must be replaced.

5.5.4 Referring to Fig. 5 and Table 1 (para 2.1), set the Multifunctional Control Pressure Adjuster to provide the required setting pressure for the installation.

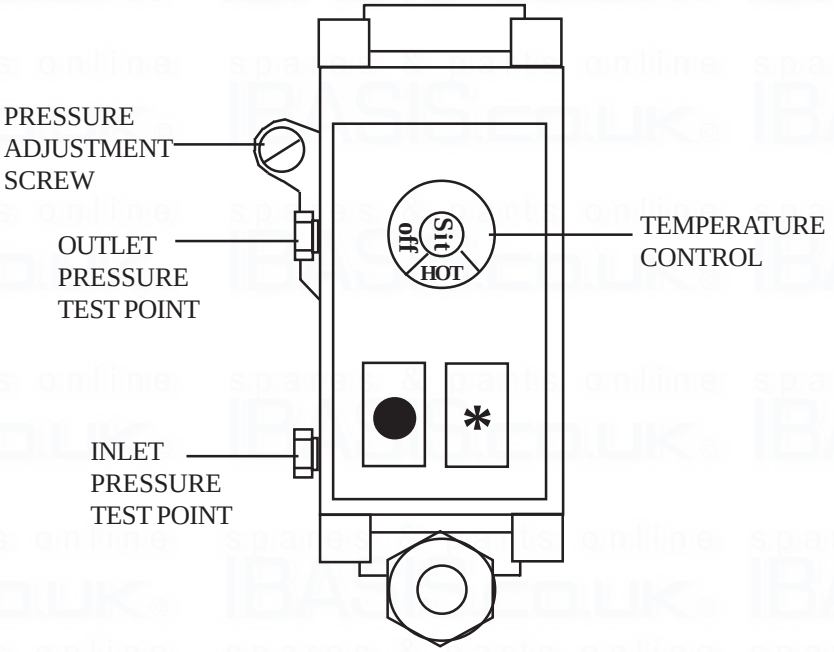

Fig. 5
Multifunctional control Component Identification

5.6 **SYSTEM OPERATION:**

5.6.1 With the appliance ignited, ensure that all controls operate correctly.

5.6.2 Carry out a spillage test in accordance with para 3.5.8.

5.6.3 Allow the system to reach working temperature and switch appliance OFF, rapidly drain and refill the system, clearing any air locks and testing for water soundness.

5.6.4 Turn OFF the gas supply at the service cock.

5.6.5 At the Multifunctional Control, remove the Gas Pressure Test Gauge and refit the Outlet Pressure cover.

5.6.6 Fit the Control Cover.

5.6.7 Turn the gas supply ON at the service cock.

5.6.8 Relight the appliance and set the appliance to the User's requirements.

6. INSTRUCTIONS FOR USER

6.1 Instruct the customer in the safe and efficient operation of both the appliance and system.

6.2 Advise customer of the necessary precautions to prevent damage to the system and building during periods of frost when the heating system is not in operation.

6.3 Advise the customer that it is important for adequate servicing to be carried out annually, in order to maintain safe and efficient operation of the appliance.

6.4 Hand User's Instructions to the customer for retention.

7. ROUTINE MAINTENANCE

IMPORTANT: Before commencing any maintenance or component replacement, ENSURE that the Gas supply is turned OFF . On completion of maintenance, ENSURE that the appliance is tested for GAS SOUNDNESS.

7.1.1 Remove and inspect the Burner and Control Assembly, cleaning the Main Burner, Pilot Burner, and injectors as required.

7.1.2 Inspect the Thermocouple and ignition lead for signs of damage, cleaning or replacing as required.

7.1.3 Inspect the Heat Exchanger flueways, clean by brushing from above and below and taking care to avoid damaging the surrounding insulation. Remove debris from the Heat Exchanger and Burner aperture using a vacuum cleaner or air duster. Clean any debris from the heat shield at the base of the appliance.

7.1.4 Ignite the appliance and test for gas soundness.

7.1.5 Ensure the appliance and controls are operating correctly.

7.1.6 Carry out spillage test to ensure flue products are clearing satisfactorily.

7.2 **BURNER AND CONTROLS ASSEMBLY:**

7.2.1 Ensure that the gas supply is turned OFF at the supply cock.

7.2.2 Disconnect the gas supply to the appliance.

7.2.3 Disconnect the ignition lead from the Piezo unit and remove the Control Cover.

7.2.4 Withdraw the retaining plug from the thermostat pocket and remove the thermostat phial, taking care to avoid damage to the thermostat.

7.2.5 Release the Burner Mounting Screw and withdraw the Burner and Control Assembly.

7.2.6 Refitment or replacement is in reverse order, ensuring that:

a. The lug on rear of the main burner engages into the bracket at the rear of the appliance body.
b. When refitting the thermostat phial care is taken to avoid damaging the phial.

7.3 **PILOT ASSEMBLY:**

7.3.1 Remove the Burner and Controls Assembly as detailed in para 7.1

7.3.2 Disconnect the ignition lead from electrode.

7.3.3 Release the 2 x screws securing the Pilot Assembly, and withdraw the Pilot Assembly from the Main Burner mounting bracket.

7.3.4 Release the Pilot Feed Pipe from the Pilot Assembly and withdraw the Pilot Injector.

7.3.5 Release the thermocouple connection from the Multifunctional Control.

7.3.6 Refitment or replacement is in reverse order, ensuring that the thermocouple connection at the Multifunctional Control is not overtightened, (finger tight + ¼ turn only).

7.4 MAIN INJECTOR:

7.4.1 Remove the Burner and Controls Assembly as detailed in para 7.2

7.4.2 Remove the Pilot Assembly as detailed in para 7.3

7.4.3 Release the Main Burner lock nut, and unscrew the Main Burner from the injector.

7.4.4 Unscrew the main injector from the injector housing.

7.4.5 Refitment or replacement is in reverse order, ensuring that the Main Burner is screwed in as close as possible to the injector shoulder. **NOTE:** If burner is not vertically aligned, the burner and control assembly will not fit into the water body for re-assembly.

7.5 DRAUGHT DIVERTER:

7.5.1 Release the flue split collar.

7.5.2 Release the 4 x screws securing the upper front plate to the top cover and withdraw the upper front plate.

7.5.3 Release the screw securing the draught diverter to the appliance and withdraw the draught diverter and top cover.

7.5.4 Release the 4 x screws securing the top cover to the draught diverter at the flue spigot and withdraw the draught diverter. (This is only necessary should the draught diverter require replacement.)

7.5.5 Refitment or replacement is in reverse order.

Note: When refitting or replacing the draught diverter assembly, ensure that the spigot on the assembly engages in the flange located on the rear of the heat exchanger body.

7.6 HEAT EXCHANGER ASSEMBLY:

7.6.1 Remove the Burner and Controls Assembly as detailed in para 7.2

7.6.2 Remove the Draught Diverter as detailed in para 7.5

7.6.3 Drain the heating system.

7.6.4 Disconnect the water body at the flow and return connections.

7.6.5 Remove the appliance from its wall or floor fixing.

7.6.6 Release the 4 x screws securing the heat exchanger to the appliance casing and withdraw the heat exchanger.

7.6.7 Refitment or replacement is in reverse order.

7.7 MULTIFUNCTIONAL CONTROL:

7.7.1 Remove the Burner and Controls Assembly as detailed in para 7.2

7.7.2 Remove the Pilot Assembly and main injector as detailed in 7.3 and 7.4

7.7.2 Disconnect the Pilot Feed Pipe and thermocouple capillary from the Multifunctional Control.

7.7.3 Release the bolt and nut securing the mounting bracket, and withdraw the bracket.

7.7.4 Refitment or replacement is in reverse order, ensuring replacement ‘O’ ring seal, and transfer of data badge in the event of replacement.

8. DEFECT DIAGNOSIS

IMPORTANT: If an electrical defect occurs after installation of the appliance; preliminary earth continuity, polarity, and resistance to earth checks should be carried out with a multimeter. On completion of any maintenance/fault-finding task that has required the breaking and remaking of electrical connections, then checks of continuity, polarity, and resistance to earth must be repeated.

NOTE: When purging or checking gas supplies ensure that there is adequate ventilation to the room or cupboard, and that all naked lights are extinguished.

	SYMPTOM		POSSIBLE CAUSE	RECTIFICATION
a.	Pilot fails to light.	i	No gas supply to water heater.	Check for gas at inlet pressure test point on Multifunctional Control.
		ii	Gas supply not purged.	Purge gas supply pipe in accordance with BS6891.
		iii.	Piezo faulty.	Check/replace Piezo unit, lead or Pilot Burner Assembly.
b.	Pilot fails to remain lit.	i	Thermocoulpe defective.	Replace Pilot Burner Assembly.
		ii	Pilot flame out of adjustment.	Adjust pilot flame adjusting screw to provide pilot flame of approximately 15mm long and just enveloping thermocouple tip.
c.	Main burner fails to light	i.	OFF button accidentally depressed.	Press 'OFF' button, wait for loud click (approx. 3 minutes) and repeat lighting procedure.
		ii	Thermostat overheat.	Draw off hot water from system to allow thermostat to cool, and ensure burner lights.
		iii	Thermostat defective.	Replace Multifunctional Control.
d.	Insufficient hot water.	i.	Burner operation cycle too short due to incorrect plumbing.	Check plumbing, in particular lateral runs.
f.	Water temperature outside usable range.	i.	Thermostat out of calibration.	Set thermostat for required water temperature or replace Multifunctional Control.
		ii.	Gas rate incorrect.	Check burner pressure, main injector for blockage, replace main injector if faulty.
		iii	Thermostat phial or capillary damaged.	Replace Multifunctional Control.

IMPORTANT: If a faulty heater control may have resulted in excessively high water temperatures, (above 85ºC, 185ºF), the hot water cylinder should be checked to establish whether it is a SELF-PRIMING type. If so, the circuit should be drained and refilled to ensure that the air seal between the primary and secondary circuits in the cylinder is properly established.

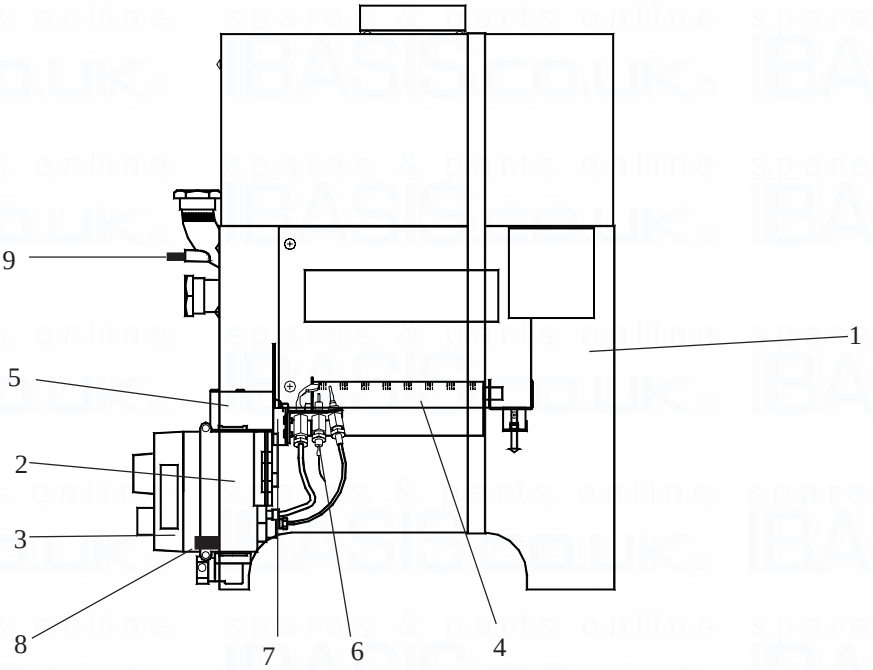

9. **SHORT LIST OF SPARES**

Key	G.C. No	J&S Part No	Description	Qty	
1	242 279	S00102	Main Body Assembly	1	
2	145 285	JAN3/30/062BN	Burner and Controls Assembly (comprising of)	1	
3		BOS 01104	Multifunctional Control Mini SIT	1	
	381 6070	S00260	'O' Ring Seal	1	
4	384 615	BOS 00562	Burner Arm	1	
5		JAN3-0704000	Pilot burner mounting bracket	1	
6	244 880	BOS 02397/1	Pilot Body	1	and
		1000-0701260	Pilot Injector (SIT 0.977.113)	1	and
		1000-0701800	Hook nut 4mm	1	and
		1000-0701790	Hook olive 4mm	1	and
		BOS 02401	Thermocouple	1	
	382 488	1000-0701810	Shear Off 4mm	1	
		1000-0703000	Pilot Gas Feed Pipe	1	
	397 819	BOS 02394	Igniter Lead	1	
		BOS 01970	Electrode	1	
7		1000-0701470	Main Injector housing	1	
		BOS 01458	Lock Nut	2	
		BOS 01646	Main Injector	1	
		BOS 01160	Copper washer	1	
8	395 945	1000-0700570	Piezo Unit	1	
9	230 328	1000-2500075	Phial Retaining Plug	1	

Johnson and Starley prides itself on its ability to supply spare parts quickly and efficiently. If your service engineer indicates a problem in obtaining a spare part, advise him to contact Johnson and Starley Spares Department at the address below.

Telephone: 01604 762881

Fax : 01604 767408

JOHNSON AND STARLEY Ltd.,
Rhosili Road,
Brackmills,
Northampton NN4 7LZ

spares & parts online IBASIS.CO.UK